EVOC* Sandy Bridge Based Seed Board

Intel, in conjunction with EVOC*, is now accepting applications from select developers to receive a pre-release Sandy Bridge cased mini-ITX motherboard to jump start development ahead of silicon launch in Q1 2011.

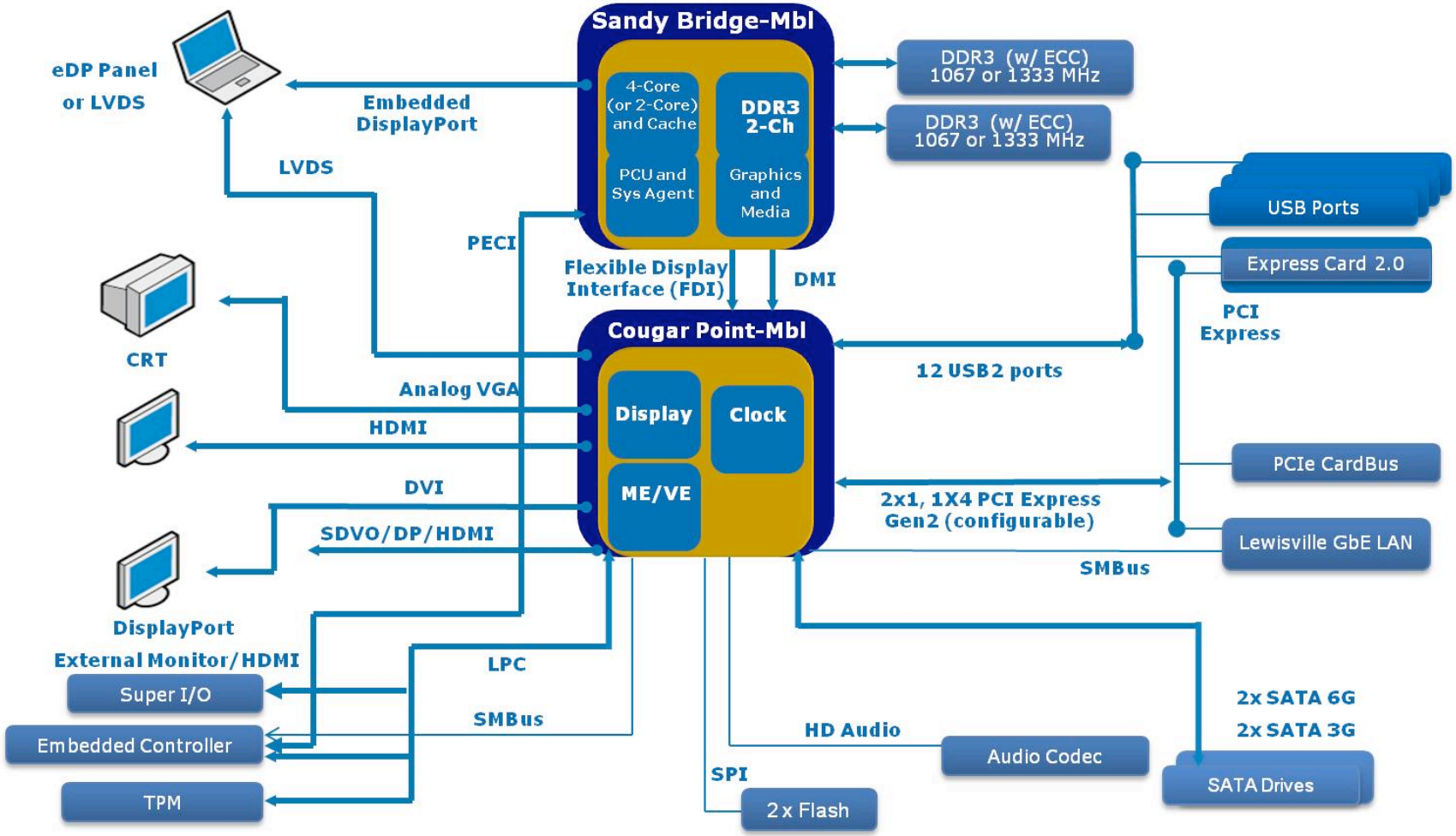

Representative block diagram of platform, final features may vary

Key features

Item	Description
Processor	Intel Sandy Bridge RPGA989 i3, i5, i7, Celeron series processor.
Chipset	INTEL QM67
Display Interface	One Embedded Display Port output One VGA output One Display Port output One HDMI output One DVI-D output One Two-channel 18/24bits LVDS Output
System Memory	Two DDR3 SO-DIMM slots Support DDR3 1066/1333/1600MHZ with Non-ECC un-buffered Memory with max. capacity up to 16GB
Storage	Four SATA connectors (SATA1/2 support 6Gbps; SATA3/4 support 3Gbps)
USB	Twelve USB2.0 ports
LAN	One INTEL 82579 (Lewisville) Giga LAN with RJ45, support WOL and AMT7.0.
Audio	HD/A AUDIO, support MIC-in/Line-IN/LINE-OUT with 3.5inch Standard Jack.
BIOS	SPI Flash SOIC-8/SOIC-16 CO-LAY
Debug Interface	One TPM1.2 Header interface CPU and PCH XDP On board Port 80 Display.
Super IO	Two RS232 Series ports
	8-bit Digital GPIO interface
HW Monitor	Voltage, FAN Speed, CPU temp and SYSTEM temp detection
WDT	Support WDT interrupt or reset
Bus Extend	Two PCIE x1 Slots One PCIE x4 Slot One MINI-PCIE Slot
Power Supply	12V adapter power supply, support S1/S3/S4/S5/Deep SleepS4&S5 function

Costs: $0; Free of charge
Availability: December ’10
# of boards available: 200 (worldwide)
Board Support: via EVOC website
OS compatible: Microsoft* XP/XPe/WinCE 6.0, Fedora *Linux* , QNX.
Limit on Orders: 1 per project by customer
Preferred Customer: OEM that will buy an off-the-shelf board
What’s included?: motherboard, 2GB memory, user’s manual on CD including drivers
Chassis: works with standard mini-ITX board (chassis available for selected customers) and Power Supply
How to Order:
Fill out an application at http://edc.intel.com/Platforms/Seed-Board-Program/